ALF-CAM200 Conference WebCam

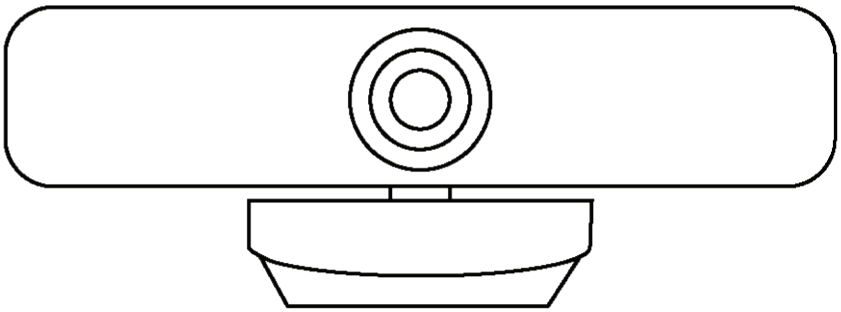

Preface

Read this user manual carefully before using the product. Pictures shown in this manual are for reference only. This manual is only for operation instruction, please contact the local distributor for maintenance assistance.

FCC Statement

This equipment generates, uses and can radiate radio frequency energy and, if not installed and used in accordance with the instructions, may cause harmful interference to radio communications. It has been tested and found to comply with the limits for a Class B digital device, pursuant to part 15 of the FCC Rules. These limits are designed to provide reasonable protection against harmful interference in a commercial installation.

Operation of this equipment in a residential area is likely to cause interference, in which case the user at their own expense will be required to take whatever measures may be necessary to correct the interference.

Any changes or modifications not expressly approved by the manufacture would void the user's authority to operate the equipment.

Do not dispose of this product with the normal household waste at the end of its life cycle. Return it to a collection point for the recycling of electrical and electronic devices. This is indicated by the symbol on the product, user manual or packaging. The materials are reusable according to their markings. By reusing, recycling or other forms of utilisation of old devices you make an important contribution to the protection of our environment. Please contact your local authorities for details about collection points.

Packaging contents

Please check the packaging contents carefully after receiving products.

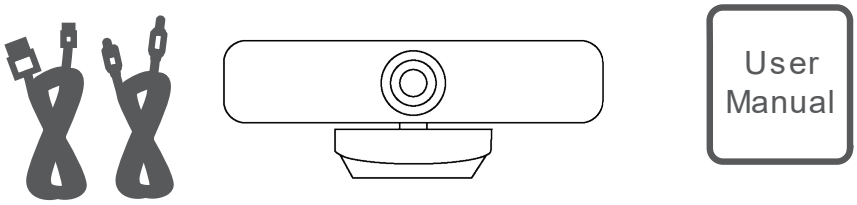

Function Display

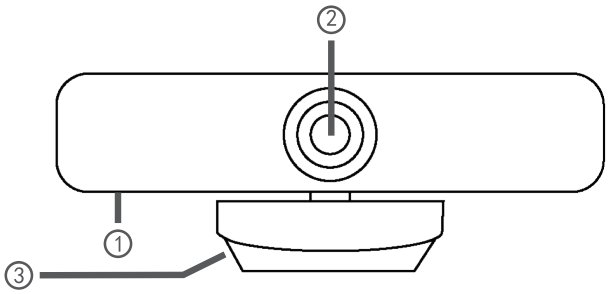

① Microphone
② Lens
③ Mount

Operation Instructions

1 Plug in USB

2 Open Visual Collaboration Software

3 Select ALF-CAM200 in the camera settings

ALF-CAM200 Webcam

Maximum effective pixels	1920 x1080, 2.1 million pixels
Output image format	MJPG and YUY2
Resolution	1920x1080, 1280x720, 640x480 @30fps
SNR	39dB
Dynamic Range	69dB
Minimum illumination	0.5lux
Field of View	96° (W)
AIC	AE, AWB, AGC, ABLC
OS Support	WinXP/ VISTA/ Win7/ Win8/ Win10, WinCE, Linux with UVC, MAC-OS 10.4.8 or later, Android 4.0 or above
Mic Qty and Far Field Distance	3 meters
Horizontal Voice Pickup	180°
Communication Mode	Full Duplex
Interface	USB C

Warranty

Limited warranty in respect of Alfatron Products Only

1.1 This limited warranty covers defects in materials and workmanship in this product.

1.2 Should warranty service be required, proof of purchase must be presented to the Company. The serial number on the product must be clearly visible and not have been tampered with in any way whatsoever.

1.3 This limited warranty does not cover any damage, deterioration or malfunction resulting from any alteration, modification, improper or unreasonable use or maintenance, misuse, abuse, accident, neglect, exposure to excess moisture, fire, improper packing and shipping (such claims must be presented to the carrier), lightning, power surges, or other acts of nature. This limited warranty does not cover any damage, deterioration or malfunction resulting from the installation or removal of this product from any installation, any unauthorized tampering with this product, any repairs attempted by anyone unauthorized by the Company to make such repairs, or any other cause which does not relate directly to a defect in materials and/or workmanship of this product. This limited warranty does not cover equipment enclosures, cables or accessories used in conjunction with this product.

This limited warranty does not cover the cost of normal maintenance. Failure of the product due to insufficient or improper maintenance is not covered.

1.4 The Company does not warrant that the product covered hereby, including, without limitation, the technology and/or integrated circuit(s) included in the product, will not become obsolete or that such items are or will remain compatible with any other product or technology with which the product may be used.

1.5 Only the original purchaser of this product is covered under this limited warranty. This limited warranty is not transferable to subsequent purchasers or owners of this product.

1.6 Unless otherwise specified, the goods are warranted in accordance with the manufacturer’s product specific warranties against any defect attributable to faulty workmanship or materials, fair wear and tear being excluded.

1.7 This limited warranty only covers the cost of faulty goods and does not include the cost of labor and travel to return the goods to the Company’s premises.

1.8 In the event of any improper maintenance, repair or service being carried out by any third persons during the warranty period without the Company’s written authorization, the limited warranty shall be void.

1.9 A 7 (seven) year limited warranty is given on the aforesaid product where used correctly according to the Company’s instructions, and only with the use of the Company’s components.

1.10 The Company will, at its sole option, provide one of the following three remedies to whatever extent it shall deem necessary to satisfy a proper claim under this limited warranty:

1.10.1 Elect to repair or facilitate the repair of any defective parts within a reasonable period of time, free of any charge for the necessary parts and labor to complete the repair and restore this product to its proper operating condition.; or

1.10.2 Replace this product with a direct replacement or with a similar product deemed by the Company to perform substantially the same function as the original product; or

1.10.3 Issue a refund of the original purchase price less depreciation to be determined based on the age of the product at the time remedy is sought under this limited warranty.

1.11 The Company is not obligated to provide the Customer with a substitute unit during the limited warranty period or at any time thereafter.

1.12 If this product is returned to the Company this product must be insured during shipment, with the insurance and shipping charges prepaid by the Customer. If this product is returned uninsured, the Customer assumes all risks of loss or damage during shipment. The Company will not be responsible for any costs related to the removal or reinstallation of this product from or into any installation. The Company will not be responsible for any costs related to any setting up this product, any adjustment of user controls or any programming required for a specific installation of this product.

1.13 Please be aware that the Company's products and components have not been tested with competitor's products and therefore the Company cannot warrant products and/or components used in conjunction with competitor's products.

1.14 The appropriateness of the goods for the purpose intended is only warranted to the extent that the goods are used in accordance with the Company's installation, classification and usage instructions.

1.15 Any claim by the Customer which is based on any defect in the quality or condition of the goods or their failure to correspond with specification shall be notified in writing to the Company within 7 days of delivery or (where the defect or failure was not apparent on reasonable inspection by the Customer) within a reasonable time after discovery of the defect or failure, but, in any event, within 6 months of delivery.

1.16 If delivery is not refused, and the Customer does not notify the Company accordingly, the Customer may not reject the goods and the Company shall have no liability and the Customer shall pay the price as if the goods had been delivered in accordance with the Agreement.

1.17 THE MAXIMUM LIABILITY OF THE COMPANY UNDER THIS LIMITED WARRANTY SHALL NOT EXCEED THE ACTUAL PURCHASE PRICE PAID FOR THE PRODUCT.